Learning Cycle Three

3

Safety First

Safety First

Introduction

The goal of this learning cycle is for the students to understand how structure and support systems are related within a transportation device. Both systems affect passenger and cargo safety and work together to ensure safe transportation.

Through the *Exploration* activities, students research different structural safety systems and prepare a presentation for the class. They also explore the concept of suspension systems by constructing shock absorbers of several different types and testing them over rough terrain using a wagon. In the *Engagement* activity, students learn how structure and suspension systems are directly related to one another by safely transporting a Pringles® potato chip along a guided path. These activities will help prepare your students for the *Primary Challenge* as they develop structure and suspension systems to transport objects safely from one point to another.

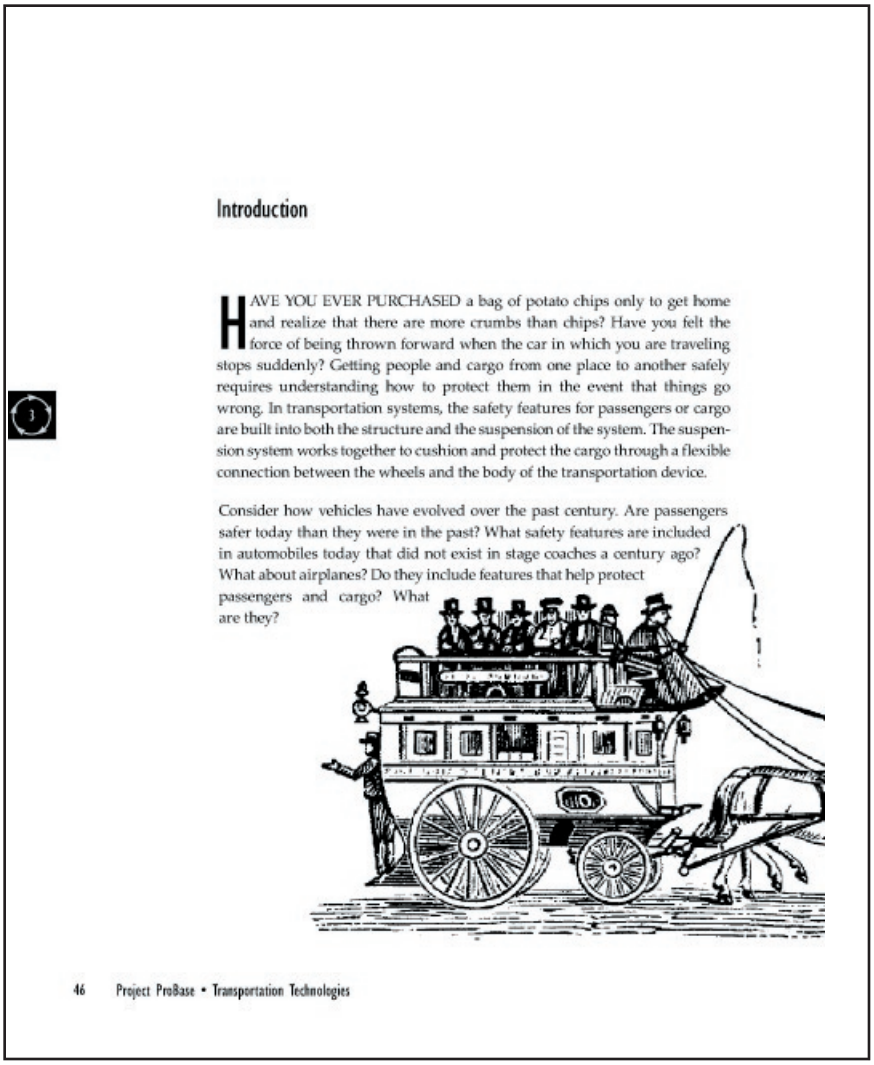

Introduction

HAVE YOU EVER PURCHASED a bag of potato chips only to get home and realize that there are more crumbs than chips? Have you felt the force of being thrown forward when the car in which you are traveling stops suddenly? Getting people and cargo from one place to another safely requires understanding how to protect them in the event that things go wrong. In transportation systems, the safety features for passengers or cargo are built into both the structure and the suspension of the system. The suspension system works together to cushion and protect the cargo through a flexible connection between the wheels and the body of the transportation device.

Consider how vehicles have evolved over the past century. Are passengers safer today than they were in the past? What safety features are included in automobiles today that did not exist in stage coaches a century ago? What about airplanes? Do they include features that help protect passengers and cargo? What are they?

46 Project ProBase • Transportation Technologies

Transportation Technologies
Learning Cycle Three Concept Map

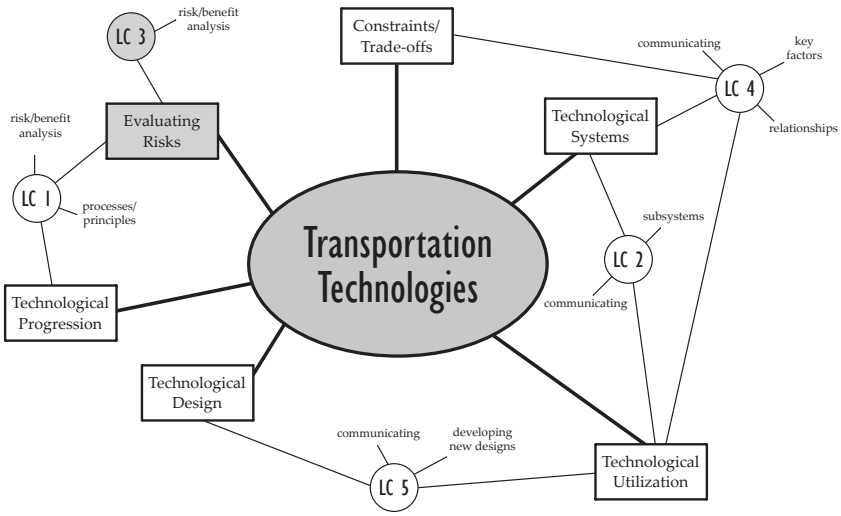

While completing the activities in this learning cycle, you will explore the various components of structural and suspension sub-systems within a transportation system. You will also spend some time thinking about how these components work together to protect cargo in transit. After completing this learning cycle, you will be able to begin designing a solution for transporting your cargo safely as a part of the *Primary Challenge*.

Objectives

After completing this learning cycle, you will be able to:

1. Describe how structural systems in a personal vehicle affect passenger and cargo safety.
2. Describe how suspension systems in a personal vehicle affect passenger and cargo safety.

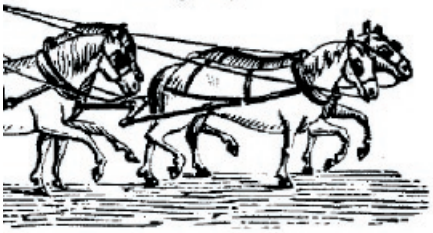

Safety First 47

Facility Requirements

Students will need to use computers with Internet access for researching the structural safety components in *Exploration I.*

Because *Exploration II* requires the transportation of water, a non-carpeted area for the construction and transportation of the cargo is ideal.

The facility for launching solutions to the *Engagement* activity needs to accommodate a means of securing the launcher and running the track approximately 40 feet to attach to a wall. This facility should also be large enough to allow the spectators to stand a safe distance from the track.

Objectives and Essential Questions

After completing this learning cycle, students will be able to:

1. Describe how structural systems in a personal vehicle affect passenger and cargo safety.

Essential Question 8a: How does the risk/benefit analysis aid the designer in addressing potential harmful effects prior to development?

2. Describe how suspension systems in a personal vehicle affect passenger and cargo safety.

Essential Question 8a: How does the risk/benefit analysis aid the designer in addressing potential harmful effects prior to development?

Equipment and Materials

Based on a class of 28 students:

Exploration

**You will need to nail the rubber stoppers to the blocks of wood before students begin the second *Exploration* activity. Make sure that the larger stoppers fit inside the fluorescent light shields and the smaller stoppers fit inside the drainpipe before purchasing. If not, make adjustments. Hot glue can be used to make the stoppers fit snugly.

Exploration materials*:*

(21) Blocks of wood (3" X 3" X 1")

(21) Rubber stoppers, #8

(5) 48" clear plastic tubes used to protect fluorescent lights

(50) Round strong magnets with an approximate 1" diameter

(7) Springs (loose tension) approximately 3" X .75"

(7) Golf tees

(7) Medium balloons

(5-7) Hot glue guns & glue sticks

(21) Plastic drainpipes (1.5" X 6")

(21) Rubber stoppers, #7

(2) Small toy wagons

Suggested Daily Outline

Estimated Number of 50-minute class periods: **7**

Day One	Day Two	Day Three	
Introduction, *Exploration I*	*Exploration I* *Reflection I*	*Exploration II*	
Day Four	**Day Five**	**Day Six**	**Day Seven**
Exploration II *Reflection II*	*Engagement*	*Engagement*	*Engagement, Preparing for the Challenge*

Engagement materials

**You will need to construct a firing device for the CO_2 powered vehicle for the *Engagement* activity. Follow the diagram provided in the *Engagement* section to build the device and use the following materials:

CO 2 firing pin set (Pitsco # 11341) **or**
1 spring-loaded center punch

Large gate hinge (may use a hammer)

50' Nylon fishing line (at least 50 lb. Test)

(2) Eye screws

Wood block (1" X 6" X 48")

Student materials:

(7) Mathematical analysis sheets (located in the Appendix)

(7) Pieces of cardboard (1' x1')

(7) Styrofoam blocks (3" X 3" X 3")

(7) Foam peanuts

(70) Wood craft sticks

(28) Straws

(14) Eye hooks

(7) 12 oz. paper cups

(7) Index cards

(14) Rubber bands

(7) CO 2 cartridges (4 grams) Optional source: Pitsco #W53338

Masking tape

String

Egg (optional)

Teaching Tips

Potential discussion questions have been included in the Student Guide to aid the students' research. Suggested topics for student research are listed below. You may add to this list; however, the topics should be narrow so that students can successfully locate information about the topic in a short time period.

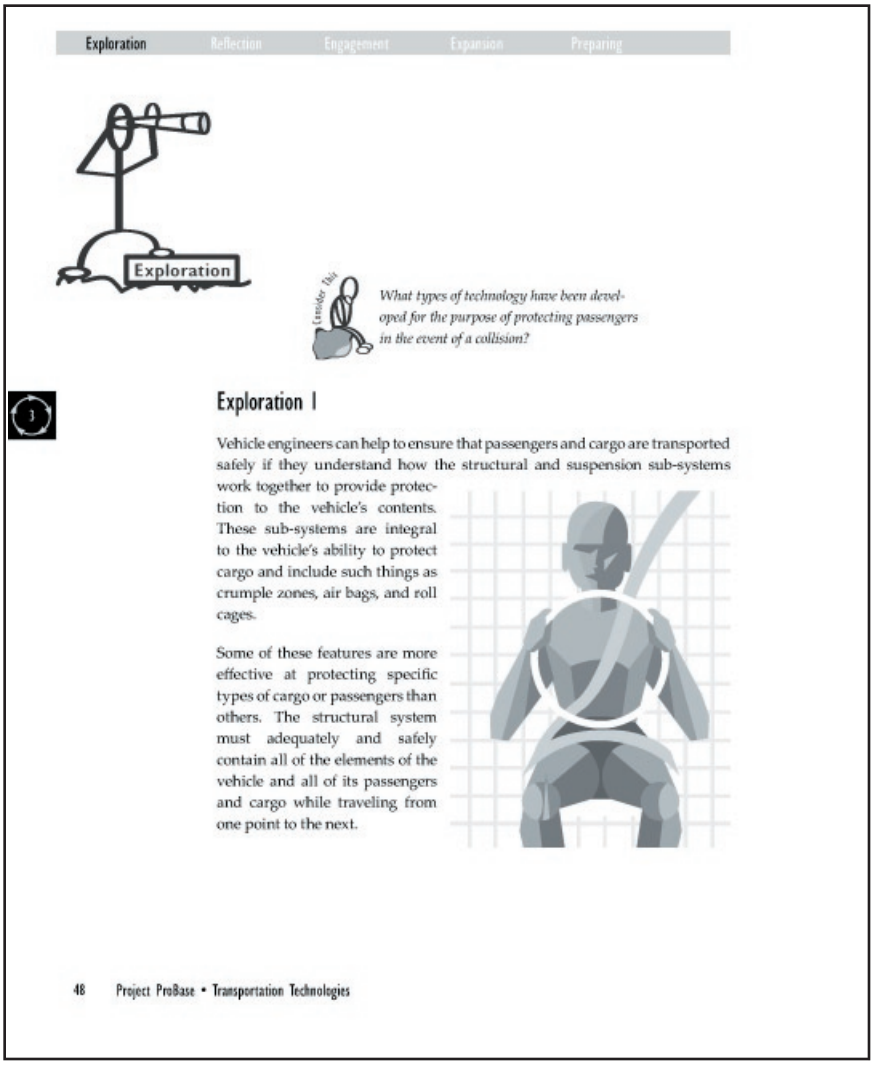

Exploration Reflection Engagement Expansion Preparing

Exploration

Consider This

What types of technology have been developed for the purpose of protecting passengers in the event of a collision?

Exploration 1

Vehicle engineers can help to ensure that passengers and cargo are transported safely if they understand how the structural and suspension sub-systems work together to provide protection to the vehicle's contents. These sub-systems are integral to the vehicle's ability to protect cargo and include such things as crumple zones, air bags, and roll cages.

Some of these features are more effective at protecting specific types of cargo or passengers than others. The structural system must adequately and safely contain all of the elements of the vehicle and all of its passengers and cargo while traveling from one point to the next.

48 Project ProBase • Transportation Technologies

Exploration 1

This activity requires students to conduct research about a topic that you assign to them, related to transportation safety. They are required to gather as much information as possible about the assigned topic before the next class period and be prepared to discuss their findings.

Suggested Research Topics:

Struts, Shock Absorbers, Crash Test, Crash Test Dummies, Crumple Zones, F=MA, Safety Harnesses, Seat Belts, Suspension Systems, Safety Feature, Structural Integrity, Air Shocks, Hydraulic Shocks, Pneumatic Shocks, Air Bags, Roll Cages, Packing/Cushioning Materials

Your instructor will randomly assign you a research topic related to vehicle safety in an effort to cover the necessary information (without replication) in the shortest time possible. You are required to gather as much information as possible about your assigned topic before the next class meeting, and be prepared to discuss your findings with the class. Some of the questions that will initiate your class discussion are listed below to help guide your research and prepare your discussion points. You should also complete the Inventor's Logbook entries in the spaces provided.

Potential Discussion Questions

1. How can members of the public, politicians, or the state of the economy influence the design of new products and systems in the transportation industry?
2. What safety features are included in transportation structural sub-systems?
3. How and why have structural safety features changed since the first vehicles were created? What events caused these changes?
4. How can we minimize the impact force on a passenger or cargo within a vehicle?

Provide your research topic here:

_____

List at least three interesting findings related to your assigned topic here:

_____

_____

_____

Inventor's Logbook

Logbook 3.1

Notes:

Teaching Tips

One of the goals of this discussion is to connect the topics that students have already identified to the concepts that they will explore in this learning cycle. For example, Newton's second law of motion which states that the applied force (F) equals the mass (M) of an object times the accelration (A) or (F=MxA)) and crumple zone design. One way to initiate a lively discussion is to begin the class period with a demonstration that connects several of these concepts.

3

Here are some guidelines for this demonstration:

- Suspend fabric, such as a bed sheet, so that it is free to move at the bottom and is high enough to allow for an egg to be thrown into the cloth.
- Cover the floor surrounding the fabric with plastic to aid in clean up.
- Have one of your strongest students throw an egg into the material as the class observes the impact. It is best to have some students standing on the sides of the fabric so that they can observe how the material deflects the impact of the egg. They should watch the fabric's profile on impact.
- Have another student drop an egg onto the plastic from shoulder height as the other students observe the egg's impact.

Obviously, the egg dropped on to a hard surface will break. Less obvious is an egg's ability to withstand the impact when thrown against a flexible material like a bed sheet. What needs to be highlighted through the resulting discussion is that if we increase the time over which an object decelerates, we minimize the force on the object. Students will be completing a mathematical analysis sheet that further explores this concept after they have completed the *Engagement* activity. The *Engagement* directly relates to the topics students have identified through research; such as crumple zones designed into vehicles, the goal of effective suspension systems, and other safety features.

Teaching Tips

The following questions are presented in the Student Guide to stimulate thinking and guide their search for information related to transportation safety. You should lead a discussion regarding this information as soon as you have completed the egg-deceleration demonstration.

1. How can members of the public, politicians, or the state of the economy influence the design of new products and systems in the transportation industry?
   - *Lobby groups can petition for higher safety standards.*
   - *If the state of the economy is good, innovations such as magnetic levitation trains are more likely to be installed.*
   - *Politicians can pass laws about such things as child restraints or airbags to improve safety features.*

2. What safety features are included in structural subsystems?
   Examples include roll bars, bumpers, and door rails to absorb side impacts.

3. How and why have structural safety features changed since the first vehicles were created? What events caused these changes?
   One reason that structural safety features have changed over the years is that we drive faster today and require more safety features to protect us on impact. The Ford Pinto (mid 1970s) that exploded on rear impact is one example of an event that caused changes to the structural safety built into vehicles.

4. How can we minimize the impact force on a vehicle?
   Side door rails, airbags, crumple zones, and better bumpers are all examples of things that have been created to minimize the impact force on a vehicle. To minimize the impact force on a vehicle, the distance over which a vehicle decelerates must be increased.

Exploration II

Teaching Tips

This activity will require students to construct and test three types of suspension systems for protecting cargo: magnetic, mechanical, and fluid. Diagrams like the ones on the following page (without labels) are included in the student text. Students will construct the suspension devices using the materials you provide them.

3

Teaching Tips

Before purchasing large quantities of materials, make sure that the rubber stoppers will fit the fluorescent light shield and drain pipe. If the stopper does not fit the light shield snugly, students can apply hot glue around the stopper to produce a better fit.

To streamline this activity, you should prepare the bases for the suspension systems by nailing the rubber stoppers to the center of each board before students begin this activity. Also, to save resources, you may have each team reuse their boards and fluorescent light shields for each of the three systems. This, however, will lengthen the time spent completing the activity.

Students will need to experiment with the length of the fluorescent light shield to determine the appropriate size for each system. (Each system should work best if the light shield is approximately 7" to 8" long.)

After each device is constructed, it should be tested by pulling it in a wagon over a given course. The drain pipe should be filled to the brim with water. The amount of water should be measured before and after running the course to assess the effectiveness of each suspension system (in this case, the more water spilled, the less effective the system). To streamline this activity, you should prepare the bodies for the suspension systems by mounting the plastic tubes onto boards that will fit inside the wagons before students begin this activity.

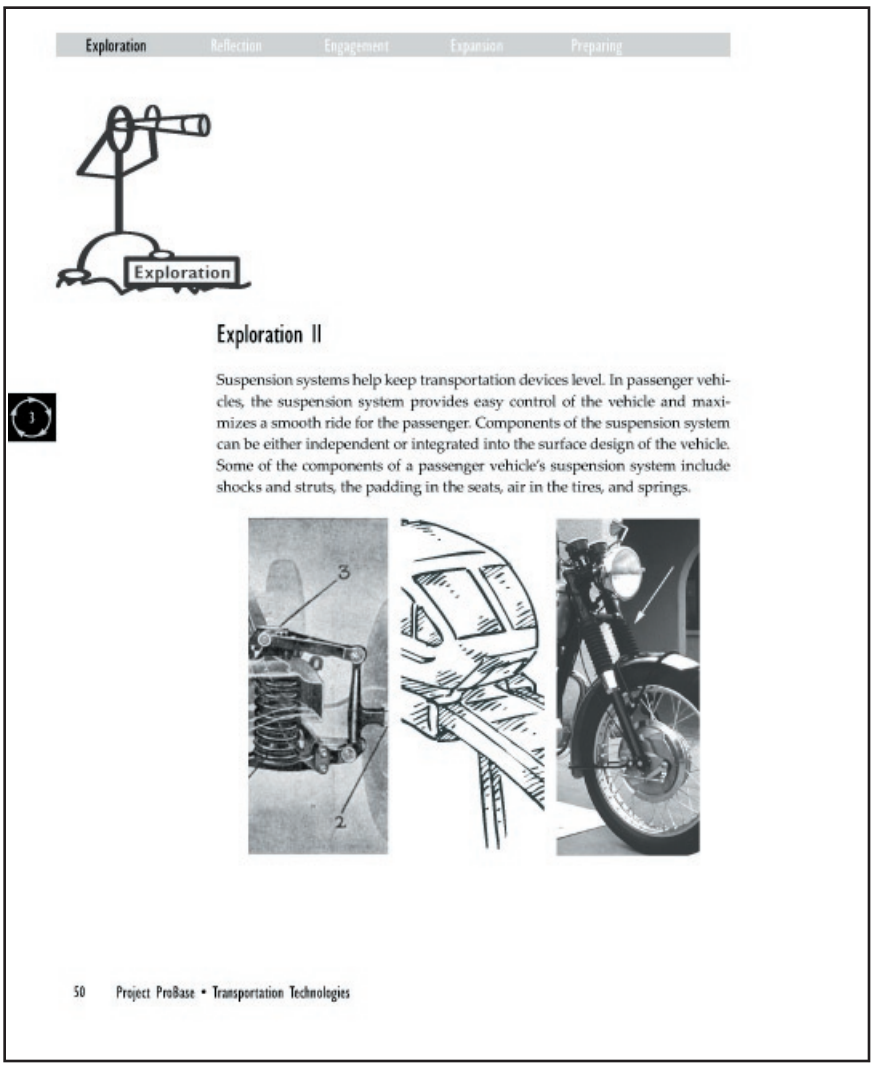

Exploration Reflection Engagement Expansion Preparing

Exploration

Exploration II

Suspension systems help keep transportation devices level. In passenger vehicles, the suspension system provides easy control of the vehicle and maximizes a smooth ride for the passenger. Components of the suspension system can be either independent or integrated into the surface design of the vehicle. Some of the components of a passenger vehicle's suspension system include shocks and struts, the padding in the seats, air in the tires, and springs.

50 Project ProBase • Transportation Technologies

Example for preparing suspension system body

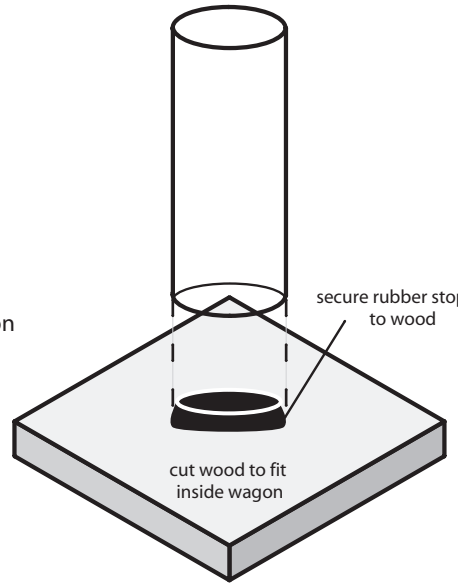

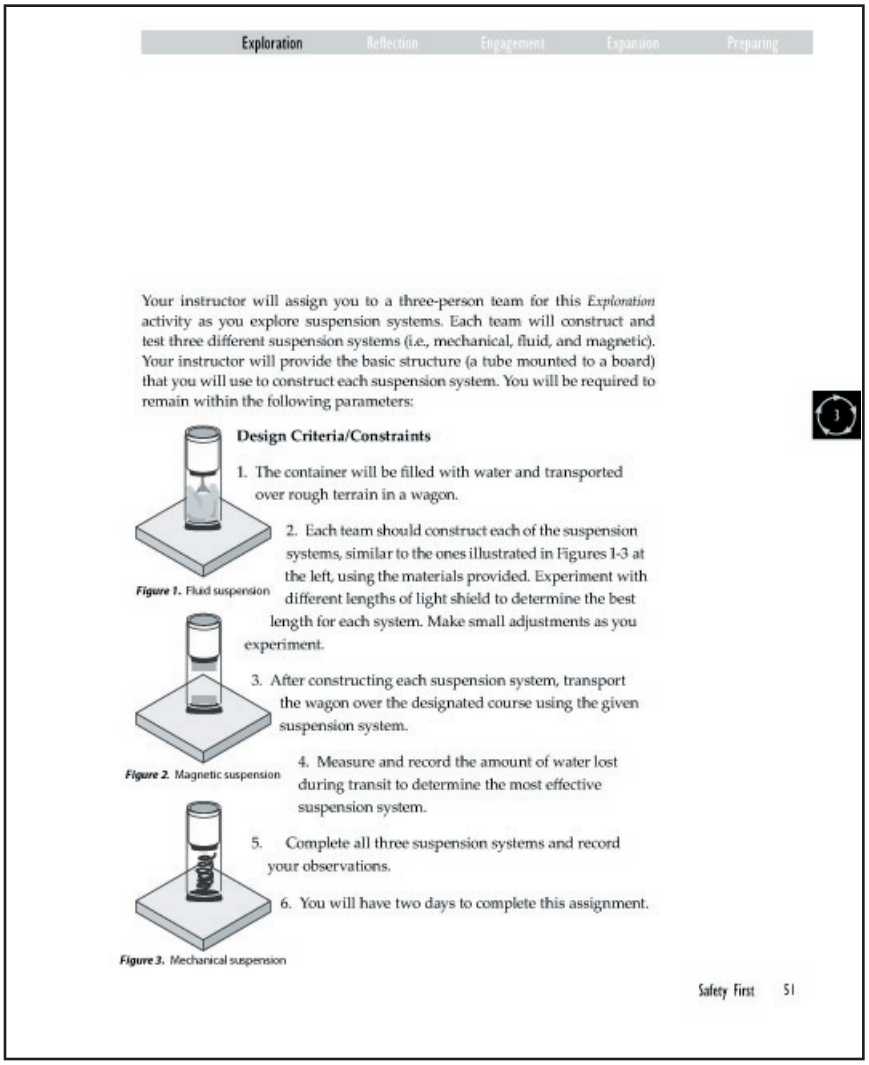

Exploration Reflection Engagement Expansion Preparing

Your instructor will assign you to a three-person team for this *Exploration* activity as you explore suspension systems. Each team will construct and test three different suspension systems (i.e., mechanical, fluid, and magnetic). Your instructor will provide the basic structure (a tube mounted to a board) that you will use to construct each suspension system. You will be required to remain within the following parameters:

Design Criteria/Constraints

1. The container will be filled with water and transported over rough terrain in a wagon.
2. Each team should construct each of the suspension systems, similar to the ones illustrated in Figures 1-3 at the left, using the materials provided. Experiment with different lengths of light shield to determine the best length for each system. Make small adjustments as you experiment.
3. After constructing each suspension system, transport the wagon over the designated course using the given suspension system.
4. Measure and record the amount of water lost during transit to determine the most effective suspension system.
5. Complete all three suspension systems and record your observations.
6. You will have two days to complete this assignment.

Figure 1. Fluid suspension

Figure 2. Magnetic suspension

Figure 3. Mechanical suspension

Safety First 51

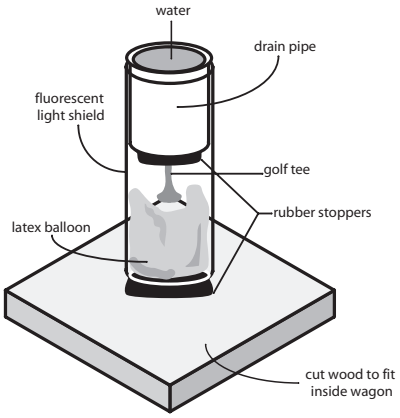

Figure 1-a. Fluid suspension
Note: Drawing is not to scale

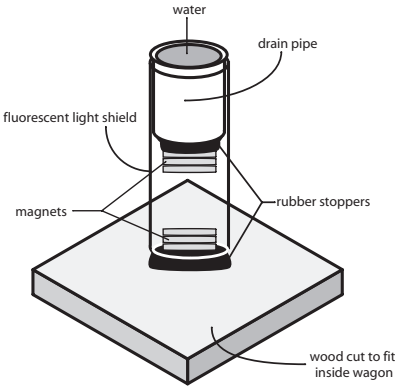

Figure 2-a. Magnetic suspension
Note: Drawing is not to scale

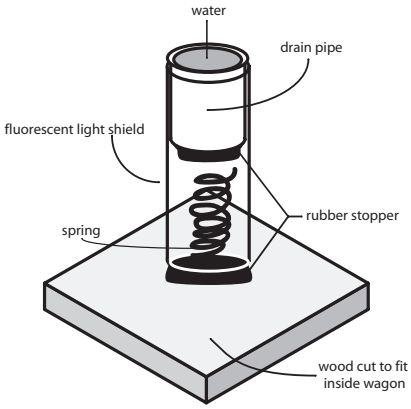

Figure 3-a. Mechanical suspension
Note: Drawing is not to scale

Teaching Tips

Prepare the course over a rough terrain such as gravel. The course should be several meters long and the pathway should be clearly marked using masking tape or string.

Reflection

Students are asked to answer the following questions in the Inventor's Logbook space provided.

1. Describe how mechanical, fluid, and magnetic suspension systems are designed to protect the cargo. How does each suspension system work?

2. What are the limitations or flaws of each type of suspension system?

3. Identify at least one example where each suspension system is used in real transportation devices.

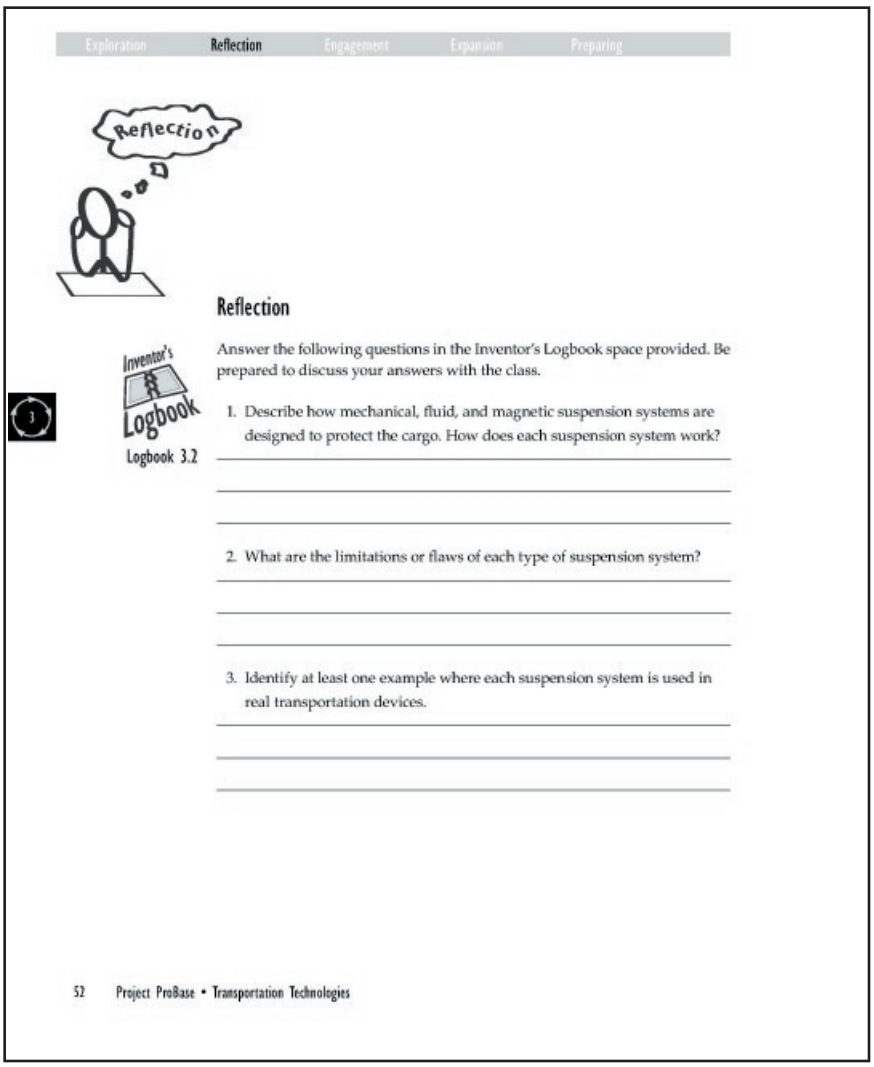

Exploration Reflection Engagement Expansion Preparing

Reflection

Inventor's Logbook

Logbook 3.2

Reflection

Answer the following questions in the Inventor's Logbook space provided. Be prepared to discuss your answers with the class.

1. Describe how mechanical, fluid, and magnetic suspension systems are designed to protect the cargo. How does each suspension system work?

2. What are the limitations or flaws of each type of suspension system?

3. Identify at least one example where each suspension system is used in real transportation devices.

52 Project ProBase • Transportation Technologies

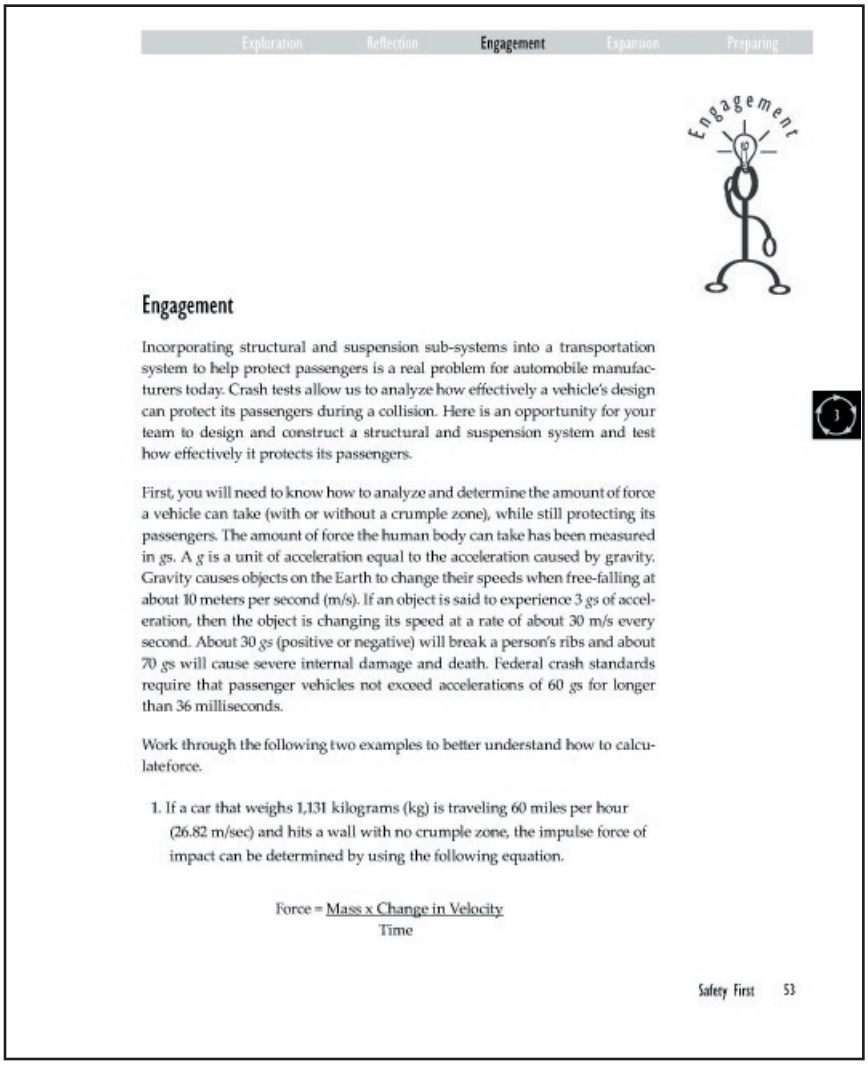

Exploration Reflection Engagement Expansion Preparing

Engagement

Engagement

Incorporating structural and suspension sub-systems into a transportation system to help protect passengers is a real problem for automobile manufacturers today. Crash tests allow us to analyze how effectively a vehicle's design can protect its passengers during a collision. Here is an opportunity for your team to design and construct a structural and suspension system and test how effectively it protects its passengers.

First, you will need to know how to analyze and determine the amount of force a vehicle can take (with or without a crumple zone), while still protecting its passengers. The amount of force the human body can take has been measured in *gs*. A *g* is a unit of acceleration equal to the acceleration caused by gravity. Gravity causes objects on the Earth to change their speeds when free-falling at about 10 meters per second (m/s). If an object is said to experience 3 *gs* of acceleration, then the object is changing its speed at a rate of about 30 m/s every second. About 30 *gs* (positive or negative) will break a person's ribs and about 70 *gs* will cause severe internal damage and death. Federal crash standards require that passenger vehicles not exceed accelerations of 60 *gs* for longer than 36 milliseconds.

Work through the following two examples to better understand how to calculateforce.

1. If a car that weighs 1,131 kilograms (kg) is traveling 60 miles per hour (26.82 m/sec) and hits a wall with no crumple zone, the impulse force of impact can be determined by using the following equation.

$$\text{Force} = \frac{\text{Mass x Change in Velocity}}{\text{Time}}$$

Safety First 53

You may need to assist the students in completing the mathematical analysis sheet. Each team will need to record the mass of their vehicle with cargo, the distance the car traveled, and the time in which the car traveled. If you have TI graphing calculators available, you may want to use the photo-gate technology to assist students in completing their analysis. The TI graphing calculator can provide the impulse force at impact.

If this device is not available, students should use .01 seconds for the time of deceleration without a crumple zone and .10 for time of deceleration with a crumple zone. By giving students these two times, they can focus on the science involved in crumple zone technology and its relationship to impulse force at impact.

Engagement

This design activity provides an opportunity for students to apply what they have learned about structural and suspension systems and explain how those systems work together to protect a vehicle's cargo. Each team must complete the mathematical analysis sheet, which is provided in the Appendix of this guide.

Notes:

The mass of the car is 1,131 kg and the change in velocity was 26.2 meters per second. Time in the above equation is the measurement of the amount of time it takes for the vehicle to decelerate or hit the wall and stop. For this example, the deceleration time was .01 second (s). So, the amount of force is 3,033,342 newtons (N).

$$\text{Force} = \frac{1131 \text{ kg} \times 26.82 \text{ m/sec}}{.01 \text{ s}} = 3{,}033{,}342 \text{ N}$$

2. Now, what if the same car is traveling at the same rate and hits the same target, but with a 1.5 meter crumple zone? In this example, the deceleration time increased to .1119 second. Using the same equation F= (Mass x Change in Velocity)/Time, you can see that the impulse force of impact was drastically reduced:

$$\text{Force} = \frac{1131 \text{ kg} \times 26.82 \text{ m/sec}}{.1119} = 271{,}076 \text{ N}$$

Using the previous examples, would a passenger survive either of the impacts?

In the first example, the possible *g* force applied to a passenger can be found by using the equation below:

$$\text{Acceleration} = \frac{\text{Change in Velocity}}{\text{Change in Time}}$$

The change in velocity is found by subtracting the speed upon impact, which was 26.82 m/s from the starting speed of 0 m/s. That number is then divided by the amount of time it took for the vehicle to travel from the starting point to the point of impact to find the acceleration in *g*s. In the first example, the acceleration was -273 *g*s. This is well above the amount of *g*s that are considered safe! Remember, just 70 *g*s (positive or negative) can kill a passenger.

$$\text{Acceleration} = \frac{(0\ \text{m/s} - 26.82\ \text{m/s})}{.01\ \text{s}} = \frac{-26.82\ \text{m/s}}{.01\ \text{s}} = -2{,}682\ \text{m/s}^2 \times \frac{1\ g}{9.8\ \text{m/s}^2} = -273.7\ g$$

For the second example with the 1.5 m crumple zone, the acceleration was -24.46 *g*s. In this example, the crumple zone could have meant the difference between life and death for a passenger.

$$\text{Acceleration} = \frac{(0\text{m/s} - 26.82\ \text{m/s})}{.1119\ \text{sec}} = \frac{-26.82\ \text{m/s}}{.1119\ \text{sec}} = -239.7\ \text{m/s}^2 \times \frac{1\ g}{9.8\ \text{m/s2}} = -24.46\ g$$

Notes:

Suggested setup for firing pin assembly used in *Engagement* activity.
Note: drawings not to scale

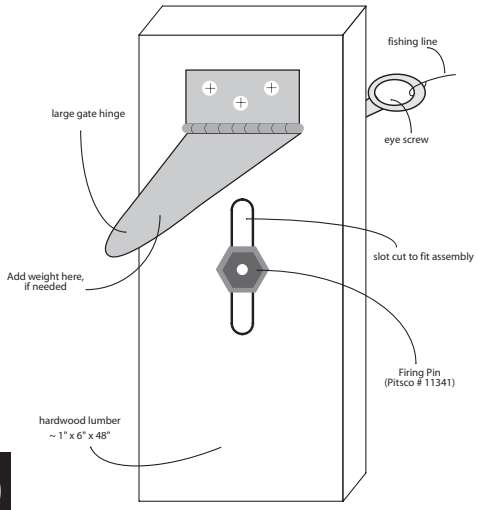

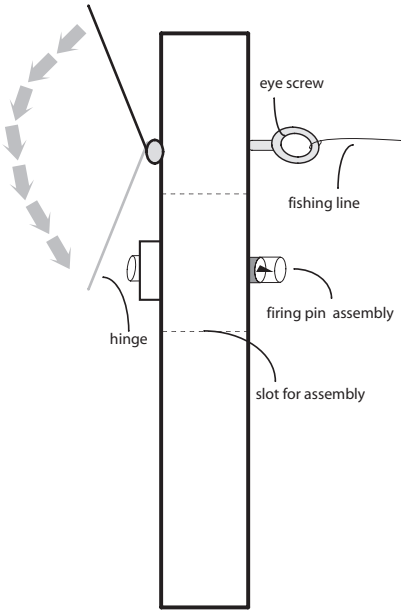

Firing pin assembly side view

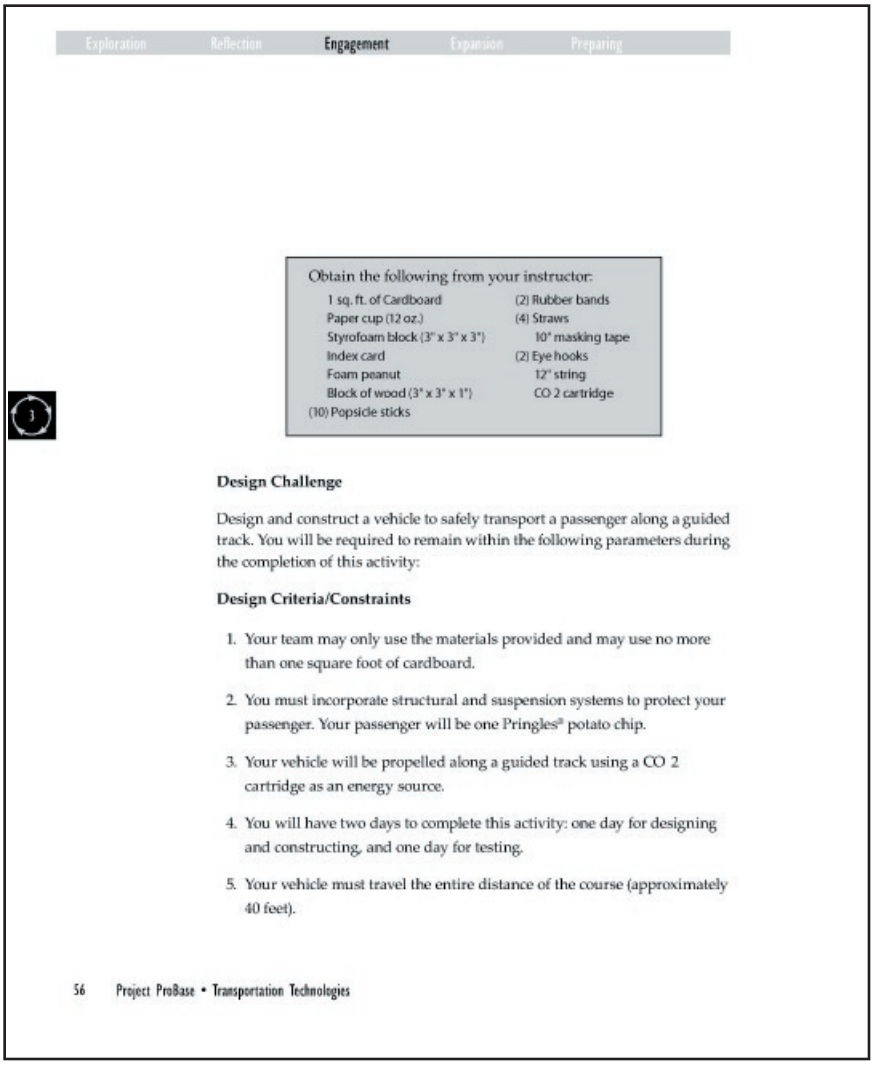

Exploration Reflection **Engagement** Expansion Preparing

Obtain the following from your instructor:

1 sq. ft. of Cardboard	(2) Rubber bands
Paper cup (12 oz.)	(4) Straws
Styrofoam block (3" x 3" x 3")	10" masking tape
Index card	(2) Eye hooks
Foam peanut	12" string
Block of wood (3" x 3" x 1")	CO 2 cartridge
(10) Popsicle sticks	

Design Challenge

Design and construct a vehicle to safely transport a passenger along a guided track. You will be required to remain within the following parameters during the completion of this activity:

Design Criteria/Constraints

1. Your team may only use the materials provided and may use no more than one square foot of cardboard.
2. You must incorporate structural and suspension systems to protect your passenger. Your passenger will be one Pringles® potato chip.
3. Your vehicle will be propelled along a guided track using a CO 2 cartridge as an energy source.
4. You will have two days to complete this activity: one day for designing and constructing, and one day for testing.
5. Your vehicle must travel the entire distance of the course (approximately 40 feet).

56 Project ProBase • Transportation Technologies

Teaching Tips

The pin assembly will need to be ordered to allow enough time for shipping.

You will need to construct the launcher prior to beginning this activity. Plans for one type of launching system are shown here and the materials are listed in the *Equipment and Materials* section.

Exploration Reflection **Engagement** Expansion Preparing

6. The vehicle must attach to the track (fishing line) using eye hooks and must accommodate a standard CO_2 cartridge. Be aware of the distance from the track to the CO_2 cartridge. Your vehicle's CO_2 cartridge must line up with the pin on the launching device.
7. Your team must provide an illustration for your design. This can be a pencil sketch or CAD drawing.
8. Your vehicle must weigh between 40 and 70 grams.
9. You must complete the mathematical analysis sheet provided by your instructor.
10. A rubric will be used to assess the effectiveness of your design. A cracked chip is considered a failure.
11. You will work in your *Primary Challenge* teams for this activity. Be sure to take advantage of the design work completed by each team.

Safety

Vehicles will be suspended on a fishing line and travel at high speeds. All components should be secure and checked by your instructor before launching each vehicle. All spectators should stand a safe distance from the test track. No one should be allowed to stand near the end of the track because vehicle parts may fly on impact.

Safety First 57

Teaching tips

The track line must be pulled as tightly as possible in order to minimize the effects of gravity as the vehicle travels. It also needs to be removable so that you can attach and remove vehicles quickly and easily.

Students should assume specific jobs to make the launch cycle time go faster. You may consider having someone in charge of putting the vehicles on, others taking them off, some students cleaning up, others launching the vehicles, and additional students completing other tasks as they arise.

Teaching tips

If you do not want to construct the firing pin assembly, students can drop their vehicles (with some additional weight) from a large height, such as the top of a set of bleachers.

Teaching tips

If the hinge does not produce enough force, students may lightly hit the firing pin or spring-loaded center punch with a mallet.

Teaching tips

The launcher needs to be secured. A metal or wood-working vice works well. The track (fish line) for travel of the vehicle should extend approximately 40 feet and attach to the wall (or concrete block) where the vehicles will crash.

The housing for the CO 2 cartridge must be at least 1" deep with a ¾" diameter hole. The students may use masking tape around the cartridge, if necessary, to ensure a snug fit within the housing.

While other teams are testing their solutions, you can direct students to record their observations in the space provided.

The analysis of the system is an important aspect of this project. Students should analyze their solutions and at least one other solution as they address the following questions posed in the student text. Students should write their responses to the following questions in the Inventor's Logbook spaces provided.

1. What structural features were most effective in protecting the passenger?

2. What suspension features were most effective in protecting the passenger?

3. How does size of the cargo affect the design of the vehicle?

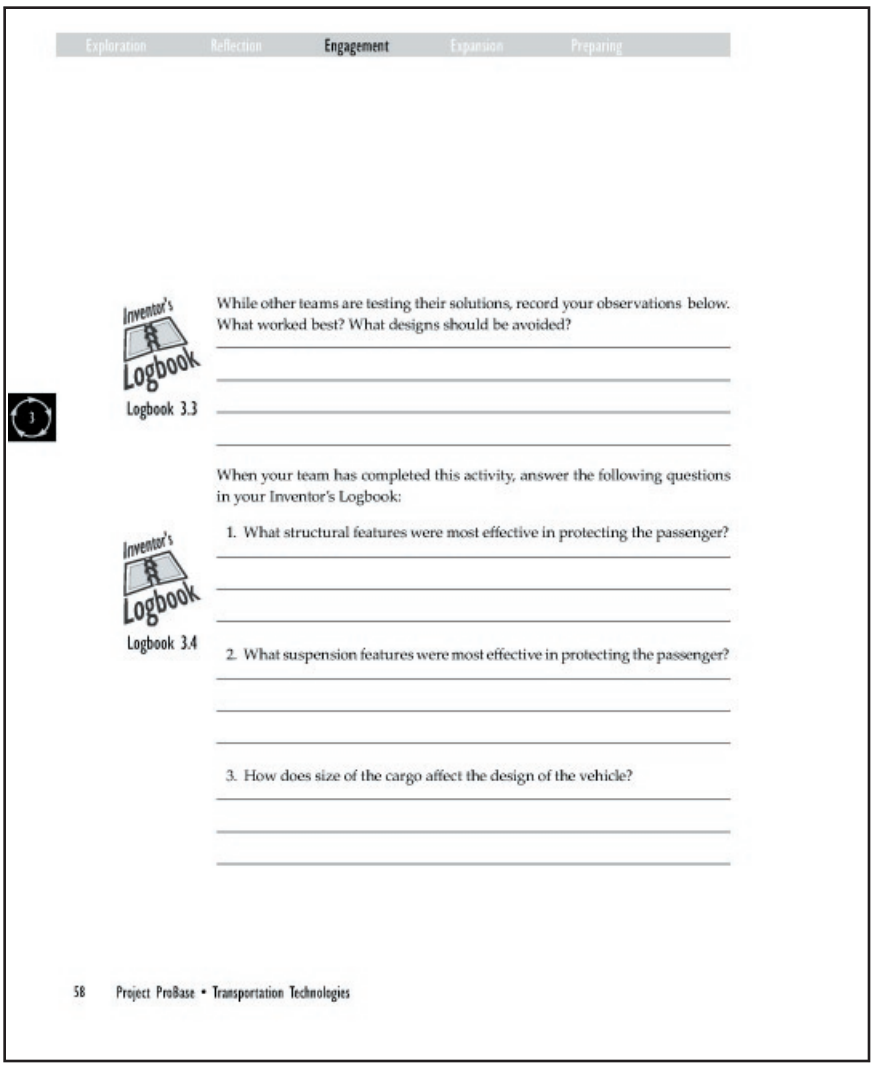

Exploration Reflection **Engagement** Expansion Preparing

Inventor's Logbook

Logbook 3.3

While other teams are testing their solutions, record your observations below. What worked best? What designs should be avoided?

When your team has completed this activity, answer the following questions in your Inventor's Logbook:

Inventor's Logbook

Logbook 3.4

1. What structural features were most effective in protecting the passenger?

2. What suspension features were most effective in protecting the passenger?

3. How does size of the cargo affect the design of the vehicle?

58 Project ProBase • Transportation Technologies

Safety

Vehicles will be suspended on a fishing line and travel at high rates of speed. All components should be secure and checked by you before launching each vehicle. All spectators should stand a safe distance from the test track. No one should be allowed to stand near the end of the track because vehicle parts may fly on impact.

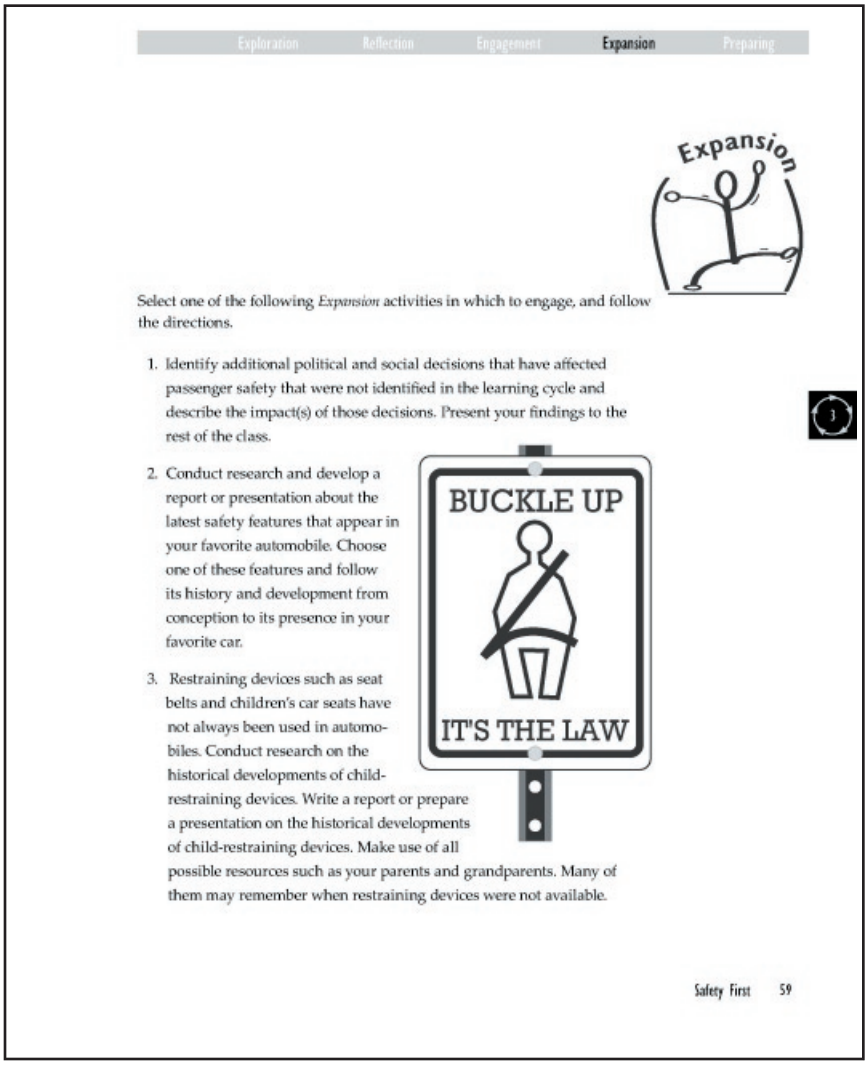

Exploration Reflection Engagement **Expansion** Preparing

Expansion

Select one of the following *Expansion* activities in which to engage, and follow the directions.

1. Identify additional political and social decisions that have affected passenger safety that were not identified in the learning cycle and describe the impact(s) of those decisions. Present your findings to the rest of the class.
2. Conduct research and develop a report or presentation about the latest safety features that appear in your favorite automobile. Choose one of these features and follow its history and development from conception to its presence in your favorite car.
3. Restraining devices such as seat belts and children's car seats have not always been used in automobiles. Conduct research on the historical developments of child-restraining devices. Write a report or prepare a presentation on the historical developments of child-restraining devices. Make use of all possible resources such as your parents and grandparents. Many of them may remember when restraining devices were not available.

BUCKLE UP

IT'S THE LAW

Safety First 59

Expansion

Although not required, these *Expansion* activities are designed to cause teams to delve deeper into the concepts explored in this learning cycle.

Students should select only one of these options.

1. Identify additional political and social decisions that have affected passenger safety that were not identified in *Reflection I* and describe the impact(s) of those decisions.
2. Conduct research and develop a report or presentation about the latest safety features that appear in your favorite automobile. Choose one of these features and follow its history and development from conception to its presence in your favorite car.
3. Restraining devices such as seat belts and children's car seats have not always been used in automobiles. Conduct research and write a report or give a presentation about the historical developments of child-restraining devices. As you conduct your research, consider asking your parents or grandparents their recollections of these safety features; they may remember when restraining devices were not available.

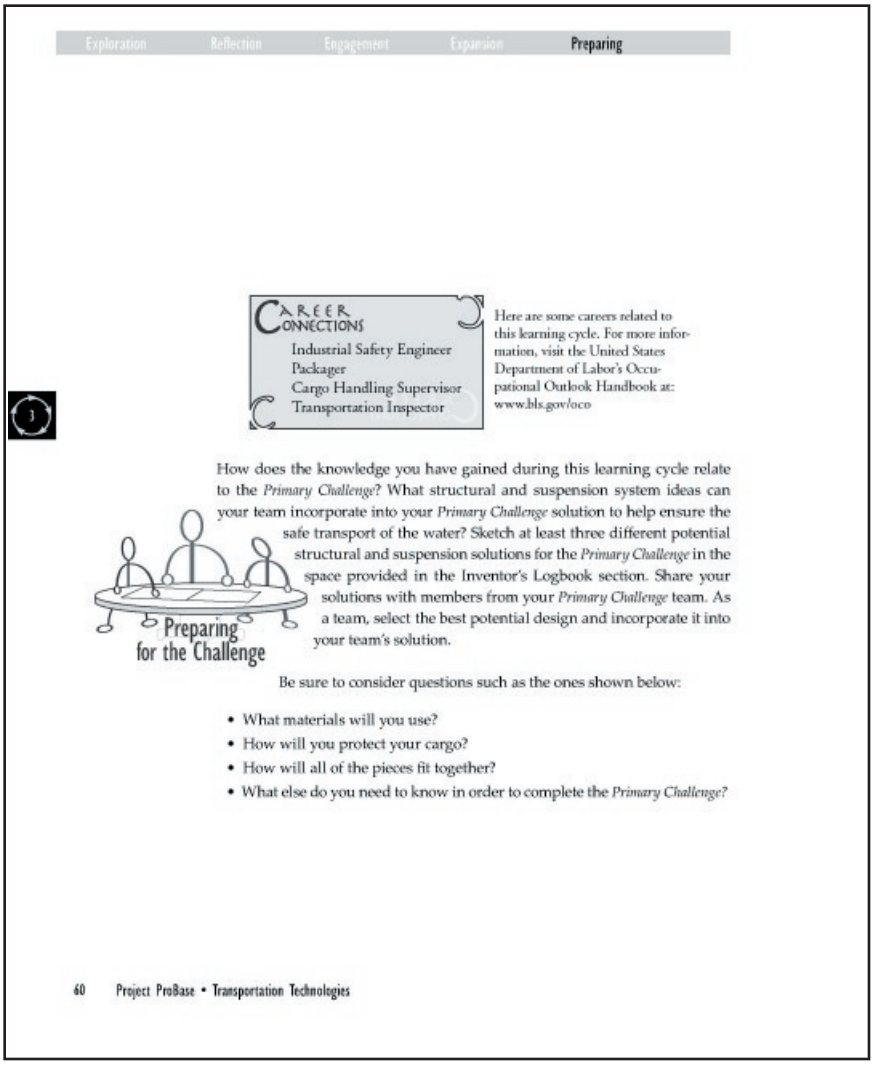

Exploration Reflection Engagement Expansion **Preparing**

CAREER CONNECTIONS

Industrial Safety Engineer
Packager
Cargo Handling Supervisor
Transportation Inspector

Here are some careers related to this learning cycle. For more information, visit the United States Department of Labor's Occupational Outlook Handbook at: www.bls.gov/oco

How does the knowledge you have gained during this learning cycle relate to the *Primary Challenge*? What structural and suspension system ideas can your team incorporate into your *Primary Challenge* solution to help ensure the safe transport of the water? Sketch at least three different potential structural and suspension solutions for the *Primary Challenge* in the space provided in the Inventor's Logbook section. Share your solutions with members from your *Primary Challenge* team. As a team, select the best potential design and incorporate it into your team's solution.

Preparing for the Challenge

Be sure to consider questions such as the ones shown below:

- What materials will you use?
- How will you protect your cargo?
- How will all of the pieces fit together?
- What else do you need to know in order to complete the *Primary Challenge*?

60 Project ProBase • Transportation Technologies

Preparing for the Challenge

Students should develop structural and suspension system ideas from these activities that can be incorporated into their solution of the *Primary Challenge.* You should give them some class time to brainstorm within their *Primary Challenge* teams, sketch some plausible solutions, and decide as a team which design they will incorporate into their solution to the *Primary Challenge*.

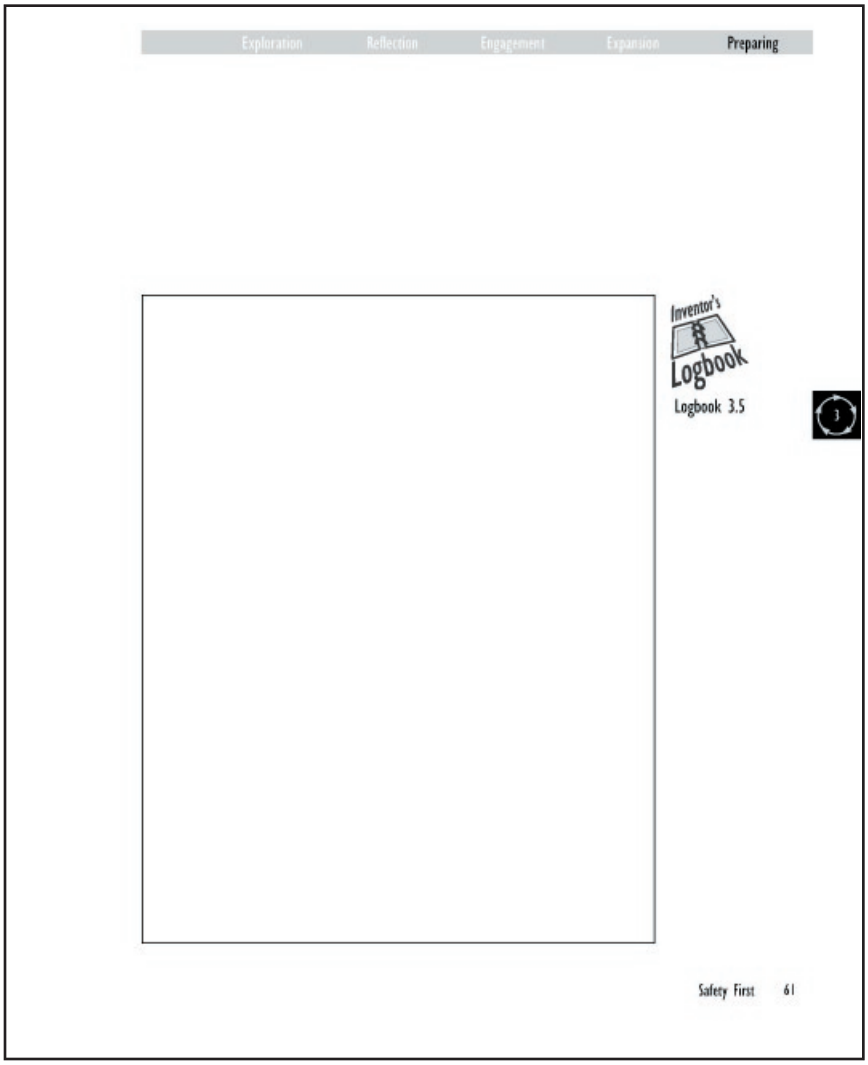

Student Assessment

An assessment rubric has been developed for the *Exploration* and *Engagement* activities. Feel free to change this rubric to better suit your particular needs.

Safety First!

Name: Date:

Element	Criteria				Points
	4	3	2	1	
Presentation and Communication Preparation	Exceptional preparation of presentation with strong visual aids/handouts/ appropriate technology.	Above average preparation of presentation with good visual aids/handouts/ appropriate technology.	Average preparation of presentation; basic visual aids/handouts/ appropriate technology.	Below average preparation of presentation.	
Effectiveness	Presentation was exceptionally effective, clear, and accurate.	Presentation effectiveness, clarity, and accuracy were above average.	Presentation effectiveness, clarity, and accuracy were average.	Presentation effectiveness, clarity, and accuracy were below average.	
Informative and Interesting	Presentation was exceptionally informative and interesting.	Presentation was highly informative and interesting.	Presentation was informative and interesting.	Presentation was neither informative nor interesting.	
Suspension Testing Apparatus Construction	Construction is of exceptional quality.	Construction is above average quality.	Construction is average quality.	Construction is below average quality.	
Safety Vehicle Design and Documentation Design	Exceptional creativity and innovation in design.	Above average creativity and innovation in design.	Average creativity and innovation in design.	Below average creativity and innovation in design.	
Mathematical Analysis	Exceptional documentation of research and design.	Above average documentation of research and design.	Average documentation or research and design.	Below average documentation of research and design.	
Functionality and Construction	Vehicle works well and is constructed well.	Vehicle works well; construction is average.	Vehicle works average; construction is below average.	Vehicle doesn't work, construction is below average.	
Inventor's Logbook Suspension	Fully comprehends suspension.	Comprehends suspension.	Comprehends suspension somewhat.	Does not comprehend suspension.	
Structure	Fully comprehends structure.	Comprehends structure.	Comprehends structure somewhat.	Does not comprehend structure.	
				Total Points	